RADIALL® MULTICONTACT CONNECTORS	TECHNICAL DATA SHEET	619 031

Series		Issue:	Page
BPX	SIZE 8 COAXIAL SOCKET CONTACT CABLE P/N: S280W503-2 BOEING P/N: S280W554-213	25 JULY 01	1 / 1

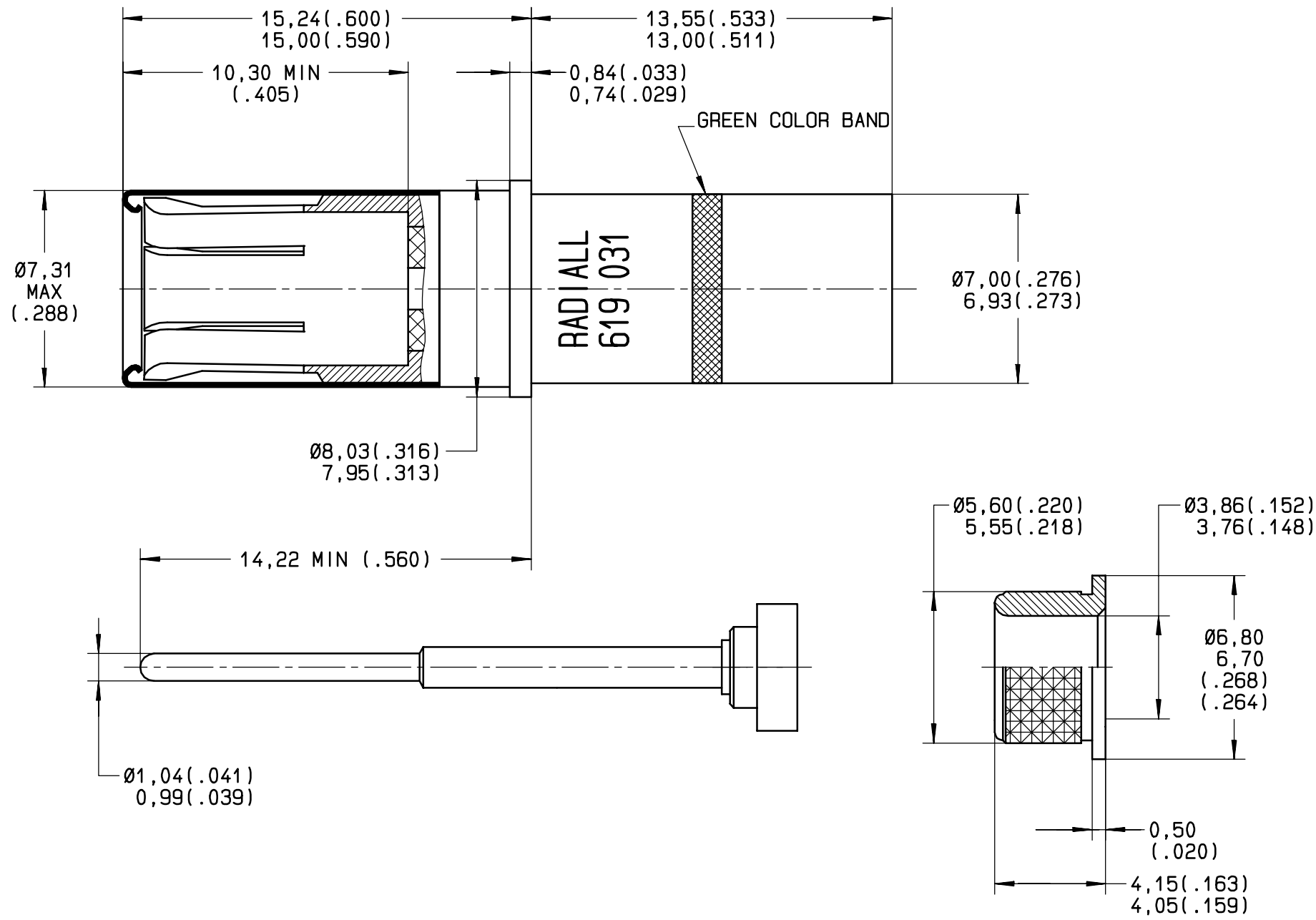

*MATERIAL:
- OUTER CONTACT: BERYLIUM COPPER PER ASTM-B-196
- CENTER CONTACT AND FERRULE: BRASS PER QQ-B-626
- PROTECTIVE SLEEVE: STAINLESS STEEL PER AISI 305

*FINISH:
- FERRULE, CENTER AND OUTER CONTACTS: PLATING .00005 INCH OF GOLD PER MIL-G-45204 TYPE I OR II GRADE C OR D CLASS 1 OVER NICKEL PER QQ-N-290
- PROTECTIVE SLEEVE: PASSIVATED

*SEE WIRING INSTRUCTIONS: RP8012

CREATION	.	.	.	.
	.	.	.	.
PEN: .	.	.	.	.
	.	.	.	.
NOM: MACARI	.	.	.	.
DATE: 17 OCT.91	.	.	.	.
	25 JULY 01	UPDATED	MACARI	.
APPR.: .	Issue	Revisions	Name	Approved

This information is given as an indication.In the continual goal to improve our products,we reserve the right to make any modifications judged necessary.